TRUE MANUFACTURING CO., INC.
U.S.A. FOODSERVICE DIVISION
2001 East Terra Lane • O'Fallon, Missouri 63366-4434 • (636)240-2400
Fax (636)272-2408 • Toll Free (800)325-6152 • Intl Fax# (001)636-272-7546
Parts Dept. (800)424-TRUE • Parts Dept. Fax# (636)272-9471 • www.truemfg.com

Project Name: _____
Location: _____
Item #: _____ *Qty:* _____
Model #: _____

AIA #
SIS #

Model:
TGN-2R-2S

TGN Series:
Reach-In Solid Swing 2 Door Refrigerator with Hydrocarbon Refrigerant



TGN-2R-2S

- True's solid door reach-in's are designed with enduring quality that protects your long term investment.
- Designed using the highest quality materials and components to provide the user with colder product temperatures, lower utility costs, exceptional food safety and the best value in today's food service marketplace.
- R290 Hydrocarbon Refrigerant.
- High capacity, factory balanced refrigeration system that maintains 32°F to 41°F (0°C to 5°C) temperatures.
- Exterior - Stainless steel front. Aluminum ends and GalFan back and top.
- Interior - Clear coated aluminum, stainless steel floor.
- Gastronorm slides with six (6) gray wire shelves.
- Exterior Temperature Display
- Barrel Door Locks
- True's self-cleaning reverse condensing unit technology eliminate the need to clean the condenser coil by reversing the fan direction upon each startup of the unit, which causes air to blow through the condensing coil and effectively removes any dirt, dust, and debris.

Bottom mounted units feature:

- "No stoop" lower shelf.
- Compressor performs in coolest, most grease free area of kitchen.
- Easily accessible condenser coil for cleaning.

ROUGH-IN DATA

Specifications subject to change without notice.
Chart dimensions rounded up to the nearest ⅛" (millimeters rounded up to next whole number).

Model	Doors	Shelves	Cabinet Dimensions (inches) (mm) W	D	H*	HP	Voltage	Amps	NEMA Config.	Cord Length (total ft.) (total m)	Crated Weight (lbs.) (kg)
TGN-2R-2S	2	6	57⅝ 1464	33⅞ 861	78½ 1994	¼ ⅓	120/60/1 220-240V/50-60Hz	2.9 1.4	5-15P ▲	10 3.05	520 236

* Height does not include 5" (127 mm) for castors.
* Depth does not include 1¾ " (44mm) for door handle or ½" for rear mechanical componets.

▲Plug type varies by country.

DESIGNED WITH INNOVATION IN THE USA
c UL us
natural refrigerant

6/26 Printed in U.S.A.

APPROVALS:

AVAILABLE AT:

Model:
TGN-2R-2S

TGN Series:
Reach-In Solid Swing 2 Door Refrigerator with Hydrocarbon Refrigerant

STANDARD FEATURES

DESIGN
- True's commitment to using the highest quality materials and oversized refrigeration systems provides the user with colder product temperatures, lower utility costs, exceptional food safety and the best value in today's food service marketplace.

REFRIGERATION SYSTEM
- Factory engineered, self-contained, capillary tube system using environmentally friendly R290 hydro carbon refrigerant that has zero (0) ozone depletion potential (ODP), & 0.02 global warming potential (GWP).
- High capacity, factory balanced refrigeration system that maintains cabinet temperatures of 32°F to 41°F (0°C to 5°C) for the best in food preservation.
- State of the art, electronically commutated evaporator and condenser fan motors. ECM motors operate at higher peak efficiencies and move a more consistent volume of air which produces less heat, reduces energy consumption and provides greater motor reliability.
- Bottom mounted condensing unit positioned for easy cleaning. Compressor runs in coolest and most grease free area of the kitchen. Allows for storage area on top of unit.
- Automatic defrost system time-initiated, temperature-terminated. Saves energy consumption and provides shortest possible defrost cycle.
- True's self-cleaning reverse condensing unit technology eliminate the need to clean the condenser coil by reversing the fan direction upon each startup of the unit, which causes air to blow through the condensing coil and effectively removes any dirt, dust, and debris.

CABINET CONSTRUCTION
- Exterior - Stainless steel front. Anodized quality aluminum ends. Corrosion resistant GalFan coated steel back and top.
- Interior - Clear coated aluminium, stainless steel base.
- Insulation - entire cabinet structure and solid door are foamed-in-place using a high density, polyurethane insulation that has zero ozone depletion potential (ODP) and zero global warming potential (GWP).
- Welded, heavy duty steel frame rail, black powder coated for corrosion protection.
- Frame rail fitted with 4" (102 mm) diameter stem castors - locks provided on front set.

DOORS
- Stainless steel exterior with clear aluminum liner to match cabinet interior. Doors extend full width of cabinet shell.
- Barrel locks standard.
- Door fitted with 15" (381 mm) long extruded heavy duty handle.
- Magnetic door gasket of one piece construction, removable without tools for ease of cleaning.

SHELVING
- Gastronorm dual tray slide with Three (3) gray wire shelves per section 20 7/8"L x 25 19/32"D (531 mm x 650 mm), and accommodates Two (2) 12"L x 20"W (305 mm x 508 mm) food pans (sold separately).
- Shelf support pilasters made of same material as cabinet interior; shelves are adjustable on ½" (13 mm) increments.

LIGHTING
- LED Interior lighting.

MODEL FEATURES
- Exterior temperature display.
- Evaporator is epoxy coated to eliminate the potential of corrosion.

ELECTRICAL
- Unit completely pre-wired at factory and ready for final connection to a 120/60/1 phase, 15 amp dedicated outlet. Cord and plug set included.



115/60/1
NEMA-5-15R

OPTIONAL FEATURES/ACCESSORIES
Upcharge and lead times may apply.
- ❑ 220-240V/50-60Hz
- ❑ 4" (102 mm) standard legs.
- ❑ 6" (153 mm) standard legs.
- ❑ 6" (153 mm) seismic/flanged legs.
- ❑ Additional shelves.
- ❑ Additional slides.
- ❑ #1 Angled tray slide kit
- ❑ #3 Universal tray slide kit

PLAN VIEW

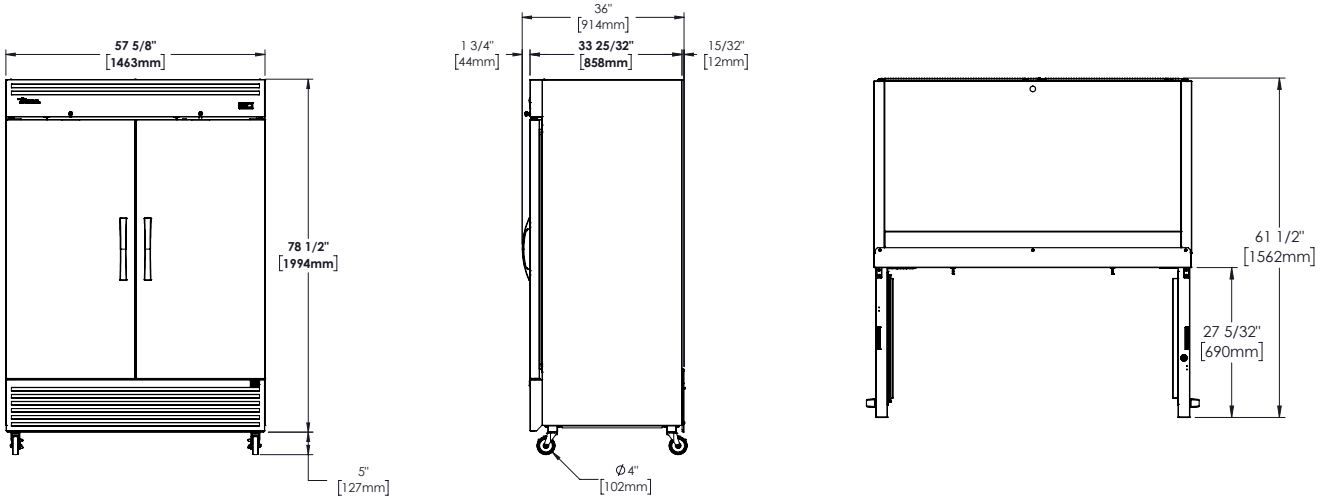

METRIC DIMENSIONS ROUNDED UP TO THE NEAREST WHOLE MILLIMETER

SPECIFICATIONS SUBJECT TO CHANGE WITHOUT NOTICE

KCL	Model	Elevation	Right	Plan	3D	Back
	TGN-2R-2S					

TRUE MANUFACTURING CO., INC.
2001 East Terra Lane • O'Fallon, Missouri 63366-4434 • (636)240-2400 • Fax (636)272-2408 • Toll Free (800)325-6152 • Intl. Fax# (001)636-272-7546 • www.truemfg.com