TRUE FOOD SERVICE EQUIPMENT, INC. • 2001 East Terra Lane • O'Fallon, Missouri 63366-4434
ph. 636.240.2400 • toll free 800.325.6152 • fax 636.272.2408 • parts fax 636.272.9471 • www.truemfg.com

Project Name	Location		AIA #
Item #	Qty	Model #	SIS #

SPEC SERIES®

PASS-THRU COMBINATION HALF FRONT/GLASS REAR SWING DOORS REFRIGERATOR WITH HYDROCARBON REFRIGERANT

models	STR2RPT-2HG/2HS-2G-HC STA2RPT-2HG/2HS-2G-HC STG2RPT-2HG/2HS-2G-HC



STR2RPT-2HG/2HS-2G-HC

Exterior	Stainless steel door, front & sides.
Interior	Stainless steel side walls, back, floor, door liner, & ceiling.
Shelving	(1) Interior kit option included per full section.

STA2RPT-2HG/2HS-2G-HC

Exterior	Stainless steel door, front & sides.
Interior	Aluminum side walls & back. Stainless steel floor & ceiling.
Shelving	(3) Heavy duty, chrome plated, wire shelves per section.

STG2RPT-2HG/2HS-2G-HC

Exterior	Stainless steel door, with matching aluminum sides.
Interior	Aluminum side walls & back. Stainless steel floor & ceiling.
Shelving	(3) Heavy duty, PVC coated, wire shelves per section.

plan view

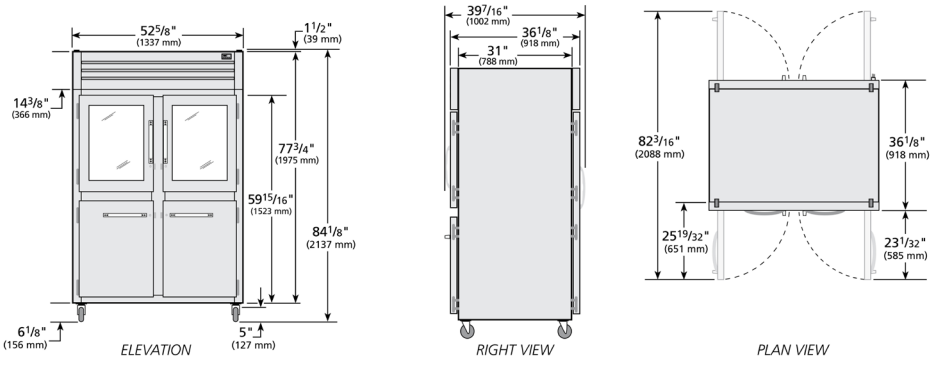

SPECIFICATIONS

Dimensions	in.	mm.
Width	52⅝	1337
Depth	36⅛	918
Height	77¾	1975
Electrical	**U.S.**	**International**
Horsepower	½	N/A
Amps	5.9	N/A
Voltage	115/60/1	
NEMA	5-15P	
Cord Length	9 ft.	2.74 M.

115/60/1
NEMA-5-15R

* Height does not include 6⅛" (156 mm) for castors or 6" (153 mm) for optional legs. Height does not include ¼" (7mm) for system mechanical components.
† Depth does not include 1½ for front & back door handles.

Specifications subject to change without notice.
Chart dimensions are roundedup to the nearest ⅛" (millimeters rounded up to the next whole number).

MADE WITH INNOVATION IN THE USA · ENERGY STAR · c UL us · CLASSIFIED UL EPH · natural refrigerant.

10/26 Printed in U.S.A.

Approvals

Available at

TRUE FOOD SERVICE EQUIPMENT, INC. • 2001 East Terra Lane • O'Fallon, Missouri 63366-4434
ph. 636.240.2400 • toll free 800.325.6152 • fax 636.272.2408 • parts fax 636.272.9471 • www.truemfg.com

Project Name	Location		AIA #
Item #	Qty	Model #	SIS #

SPEC SERIES®

PASS-THRU COMBINATION HALF FRONT/GLASS REAR SWING DOORS REFRIGERATOR WITH HYDROCARBON REFRIGERANT

models	STR2RPT-2HG/2HS-2G-HC	STA2RPT-2HG/2HS-2G-HC	STG2RPT-2HG/2HS-2G-HC



standard features

REFRIGERATION SYSTEM

- Factory engineered, self-contained, expansion valve (TXV) system using environmentally friendly R290 hydrocarbon refrigerant that has zero (0) ozone depletion potential (ODP), & 0.02 global warming potential (GWP).
- High capacity, factory balanced refrigeration system that maintains cabinet temperatures of 33°F to 38°F (.5°C to 3.3°C) for the best in food preservation.
- State of the art, electronically commutated evaporator and condenser fan motors. ECM motors operate at higher peak efficiencies and move a more consistent volume of air which produces less heat, reduces energy consumption and provides greater motor reliability.
- Top mounted refrigeration system with evaporator positioned out of food zone to maximize capacity.
- Electronic control.

CABINET CONSTRUCTION

- Insulation - Entire cabinet structure and solid door are foamed-in-place using a high density, polyurethane insulation that has zero ozone depletion potential (ODP) and zero global warming potential (GWP).
- 5" (127 mm) diameter plate castors - locks provided on front set.

DOORS

- Glass door - "Low-E", double pane thermal insulated glass. Solid door - Stainless steel
- Lifetime guaranteed bolt style door lock standard.
- Lifetime guaranteed heavy duty all metal working door handles.
- Positive seal self-closing doors with 120° stay open feature. Lifetime guaranteed external cam lift door hinges, four (4) per door section.
- Magnetic door gaskets of one piece construction, removable without tools for ease of cleaning.

LIGHTING

- LED interior lighting, safety shielded.

MODEL FEATURES

- Exterior digital temperature display, available with either °F or °C .
- Evaporator epoxy coated to eliminate the potential of corrosion
- Curb mounting ready.
- NSF/ANSI Standard 7 compliant for open food product.

ELECTRICAL

- Unit completely pre-wired at factory and ready for final connection to a 115/60/1 phase, 15 amp dedicated outlet. Cord and plug set included.

OPTIONAL FEATURES/ ACCESSORIES

(upcharge & lead times may apply)

- 6" (153 mm) standard legs.
- 6" (153 mm) seismic/flanged legs.
- 6" (153 mm) stainless steel legs.
- Additional shelves.
- Security package.

SHELVING KIT OPTIONS

- STR series kits factory installed at no charge. STA & STG series kits field installed, upcharge applies, lead times may apply.
- Kit #1: Nine (9) sets of #1 type tray slides and pilasters (field installed), bottom support of one (1) 18"L x 26"D (458 mm x 661 mm) pan or two (2) 14"L x 18"D (356 mm x 458 mm) pans.
- Kit #2: One (1) set half-section #2 steel rod tray slides and pilasters (field installed), rim support of one (1) 18"L x 26"D (458 mm x 661 mm) pan.
- Kit #3: Six (6) sets of universal type tray slides and pilasters (field installed), bottom support of one (1) 18"L x 26"D (458 mm x 661 mm) pan, two (2) 14"L x 18"D (356 mm x 458 mm) pans or two (2) 12"L x 20"D (305 mm x 508 mm) pans.
- Kit #4: Three (3) chrome shelves 26 5⁄16 "L x 21 9⁄16 "D (669 mm x 548 mm). Optional wall mounted shelf support pilasters (field installed) with four (4) shelf clips per shelf available; adjustable on ½" (13 mm) increments (must order at time of cabinet order).
- Additional kit option components available individually.

METRIC DIMENSIONS ROUNDED UP TO THE NEAREST WHOLE MILLIMETER

SPECIFICATIONS SUBJECT TO CHANGE WITHOUT NOTICE

KCL	Model	Elevation	Right	Plan	3D	Back
	ST( )2RPT-2HG/2HS-2G-HC					