DSST-3024-SS WORKTABLE

Characteristics

- Made with high quality 430 stainless steel
- Easy to assemble
- 34” Height
- Gauge 18
- Economic shipping weight

Options

- Extra stainless steel undershelf
- Adjustable stainless steel leg insert
- Set of swivel casters
- Brace bar kit

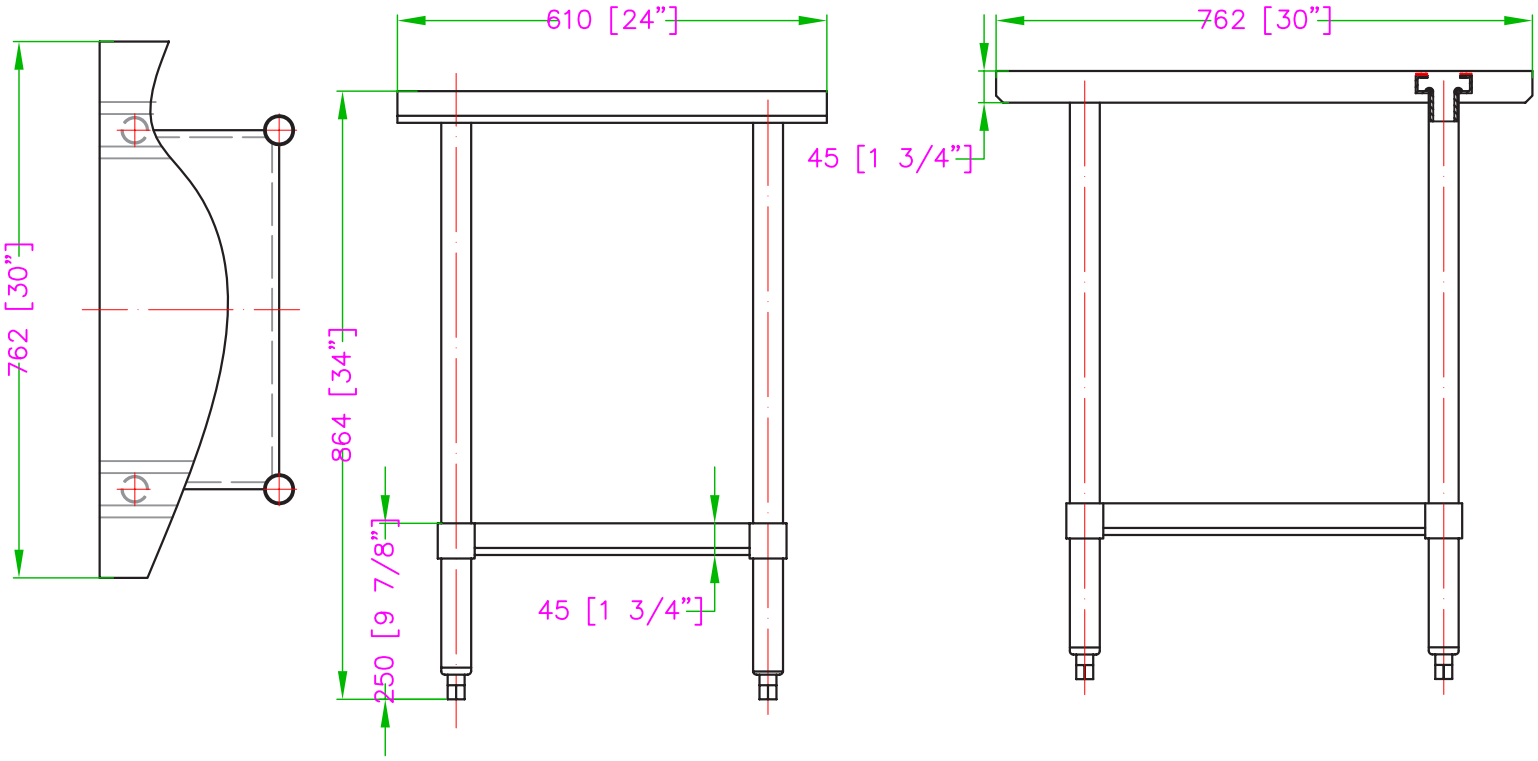

Distributed by:

DISTEX

www.distex.ca

Your Premium Partner