LFC-50

Biodigester

Top view with detail of drain pipe

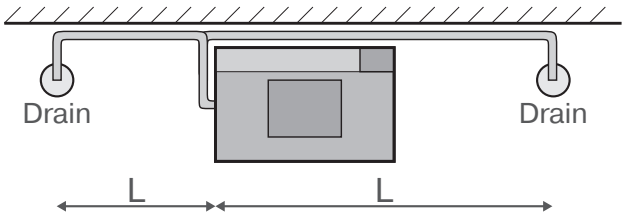

Only one drain is required on left side or right side of machine
Pipes normally run along wall for neatness, but can be direct
L = length of pipe run: 400 cm (160") maximum; 3 of 90° bends maximum; **do not** run pipes under the biodigester

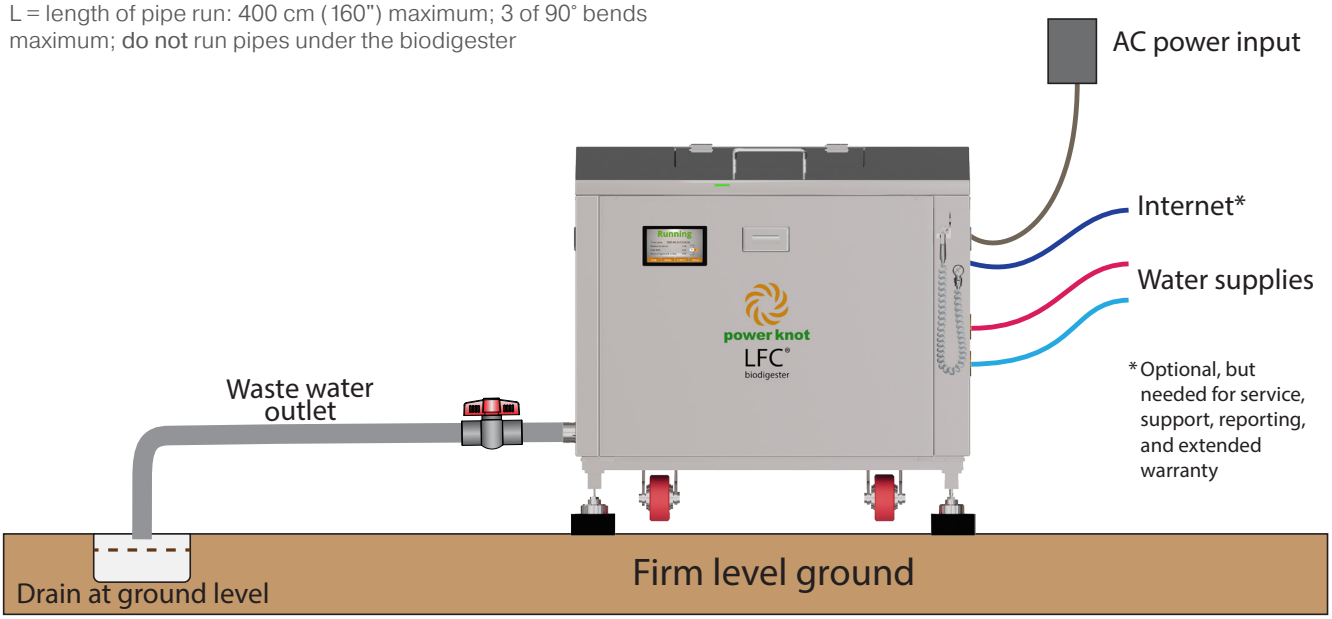

LFC-50

Installation Requirements

Maximum capacity of food waste
50 kg (110 lb)
66 litre (17 gallon)

Digestion of food waste per day
17 kg to 150 kg (38 lb to 330 lb)

Construction
All stainless steel (chassis, side panels, drum, shaft, arms, paddles, and load cells). Chassis is mirror finish (EN 10088-2 specification 2P)

Operating environment
Indoors or covered patio
Must not be exposed to rain, snow, or sunshine

Ingress protection
IP54 – splash proof and dust proof

Operating altitude
0 to 3000 m (9800 ft)

Ambient operating temperature
10°C to 40°C (50°F to 104°F) when altitude is less than 1000 m (3300 ft); reduce linearly to 24°C (75°F) at 3000 m

Floor surface flatness required
±15 mm (0.6")

Weight when empty
174 kg (384 lb)

Moving and positioning
Machine is rolled into place with casters

Machine is raised once in position and supported by feet and rubber pads

Weight when full
249 kg (549 lb) maximum

Load per pad
84 kg (185 lb) maximum

Pressure per pad
80 kPa (12 psi), maximum

Space required around machine
Left side: 20 cm (8") minimum, 28 cm (11") preferred. 100 cm (39") is required for servicing

Right side: 15 cm (6") minimum, 60 cm (24") preferred. 125 cm (50") is required for servicing

Back: 2 cm (1")

Front: 60 cm (24") minimum

Water inlets
Filters: use external filters to remove particles and hardness

Fitting: DN15 (½") female

Use flexible hose pipes to allow machine to move freely. Install valves to disconnect water for servicing and backflow prevention devices if required

Pressure: 275 to 550 kPa (40 to 80 psi, 2.8 to 5.6 kg/cm²)

Flow rate: 20 litre per minute (5 gpm) max. @ 450 kPa (65 psi, 4.5 kg/cm²)

Drum water: 42°C~50°C (108°F~120°F)

Washout water: 15°C~75°C (60°F~165°F)

Use WMX-20 water system or use external mixing valves, heaters, pressure reducers, and bladder tanks to meet the above requirements as needed

Water input per day
150 litre (40 gallon) typical

Water outlet
Use flexible coupling on output to permit machine to move freely

Install stop valve on outlet pipe (used for commissioning)

Slope pipe down by about 1 in 45 (1.3°)

Drain
Type: Must exit to sewer (not storm drain); grease trap is required in most jurisdictions

Size: 50 mm (2") minimum

Total water output per day
200 litre (53 gallon), typical

Flow rate of waste water out
20 l/min (5.3 gpm), maximum

0.1 l/min (0.04 gpm), typical average

AC supply
100 V to 260 V, 50 Hz to 60 Hz
Single phase: L+N+PE
Circuit breaker: 6 A
IEC 60320-1 C14 socket

Single phase and three phase available as special order

AC power cord
Order power cord separately. Typical length of power cord: 180 cm (6')

Facility power outlet must be accessible by operator and have a safety disconnect

Maximum power
380 W

Electrical energy per day
1.9 kWh typical

Heat generated by digestion
50 W to 200 W, 100 W typical

User interface
22 mm 3-color LED

5" touchscreen with 65k colors

Ethernet
RJ45, 100 baseT
DHCP or fixed IP address

Connect to Internet with direct cable, Wi-Fi client, or GSM modem

Automatically connects to LFC Cloud for remote support, reporting, and monitoring (included in purchase price)

Powerzyme
Microorganisms and enzymes

0.5 litre, included with initial purchase

Powerchips
Medium for microorganisms

50 litre, included with initial purchase

Operating lifetime
Expected to be 15 to 25 years

Warranty
3 years on all parts and components

(1 year for marine, security, and rentals)

Subject to terms and conditions

Weighing
NTEP certified to NIST Handbook 44

Safety
Certified to UL430 edition 8
(waste disposal machines)
CAN/CSA-C22.2 No. 60335-1:11 R16
CAN/CSA-C22.2 No. 60335-2-16:16
EN 60335-1:2012+A11:2014+A13:2017
+A1:2019+ A14:2019+A2:2019
EN 60335-2-16:2003+A1:2008+A2:2012
+A11:2018

EMC and EMI
47 CFR FCC part 15, subpart B, class B
ICES-003:2016 Issue 6, class B
ANSI C63.4:2014
EN 61000-6-1:2007 & 2005
EN 61000-6-3:2007+A1:2011 & 2006
CISPR 16-2-3:2016
CISPR 16-2-1:2006
CISPR 16-1-2:2003 + A1:2004 + A2:2006
EN 61000-3-2:2005 +A1:2008 +A2:2009
EN 61000-3-3:2013
EN 61000-4-2:1995
EN 61000-4-3:2006
EN 61000-4-4:2004
EN 61000-4-5:2006
EN 61000-4-6:2014
EN 61000-4-8:1993
EN 61000-4-11:2004

EU directives
Low Voltage Directive: 2014 / 35 / EU
EMC Directive: 2014 / 30 / EU
RoHS Directive: 2011 / 65 / EC
WEEE Directive: 2012 / 19 / EC

For complete details see User's Manual

LFC-50

Dimensions in mm ±2 mm

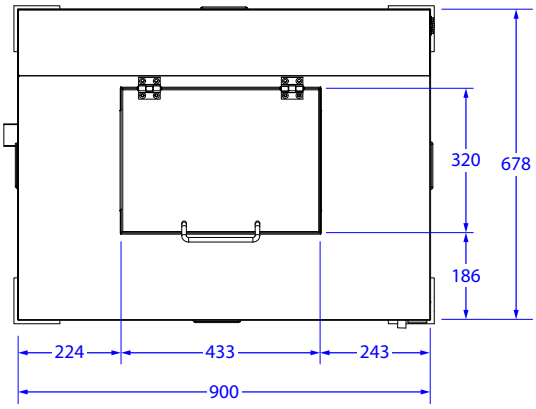

Top

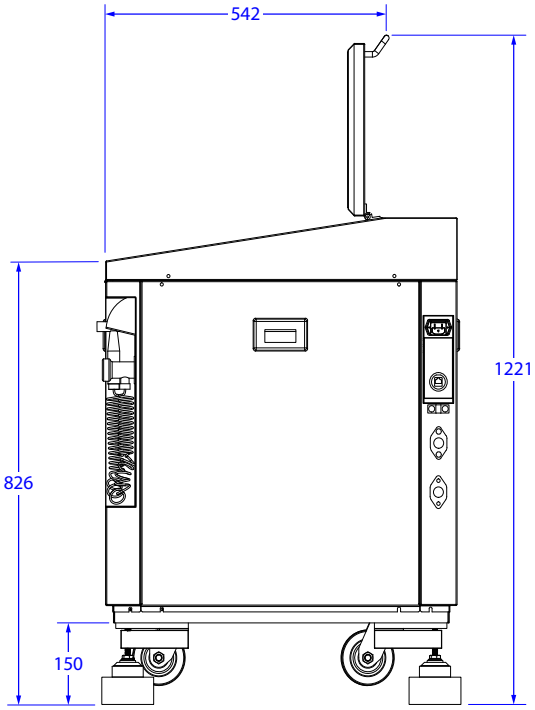

Right with door fully open

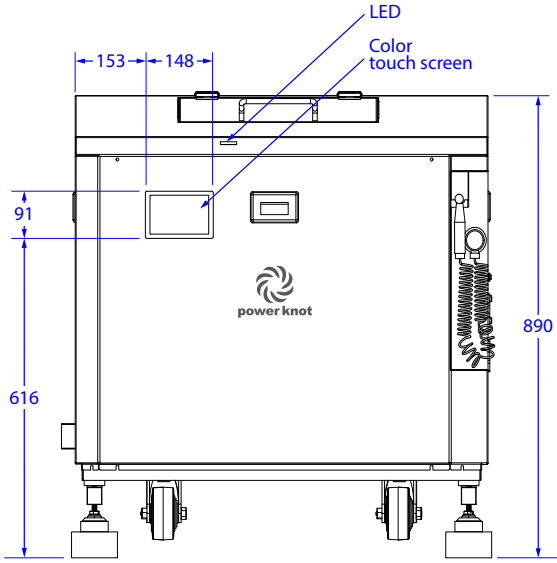

Front

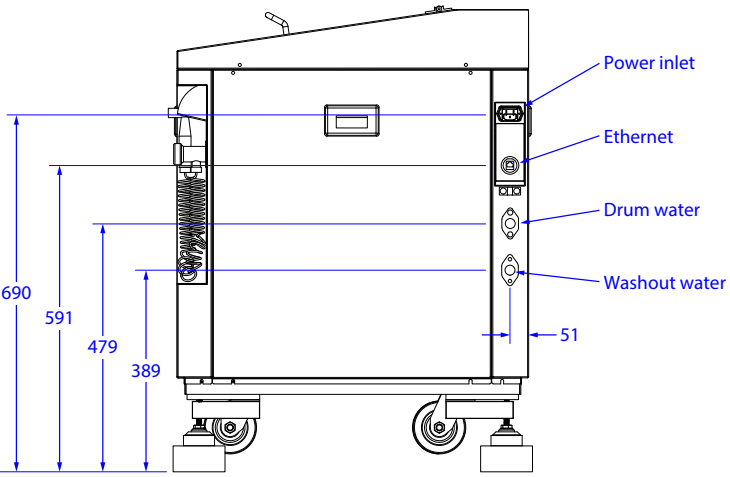

Right

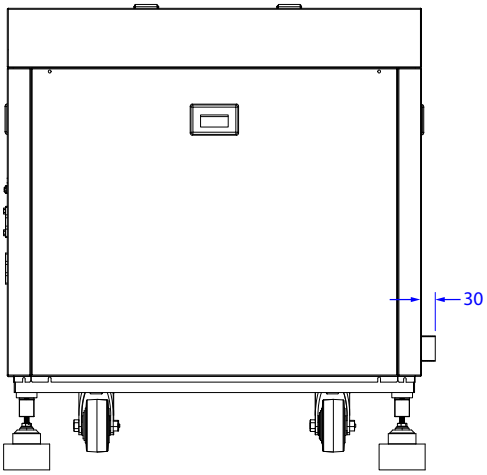

Back

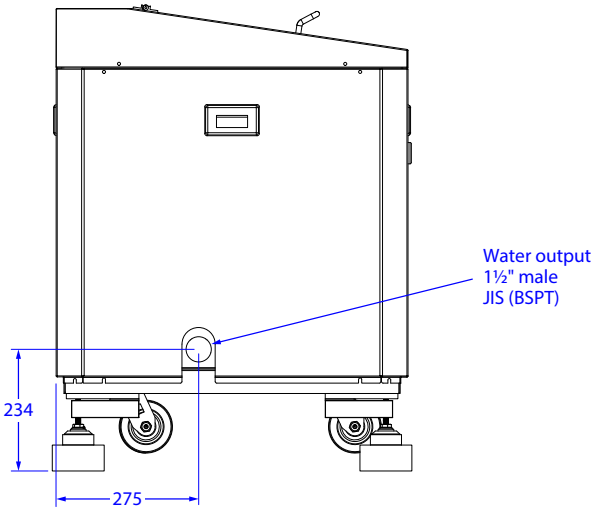

Left

LFC-50

Dimensions in inches ±0.1"
(derived from mm)

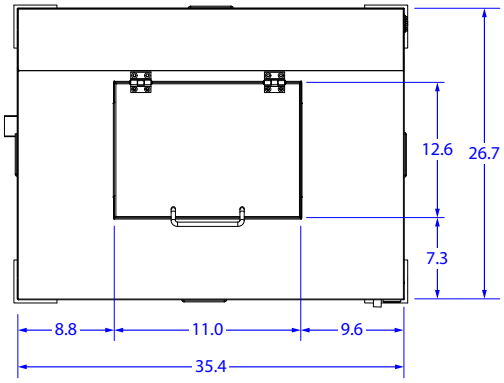

Top

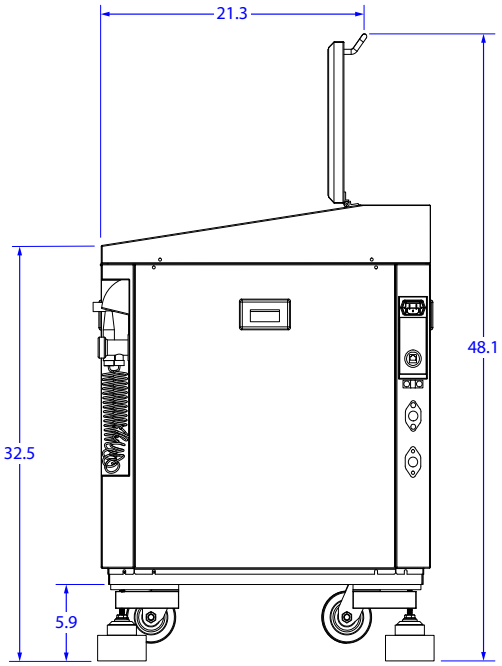

Right with door fully open

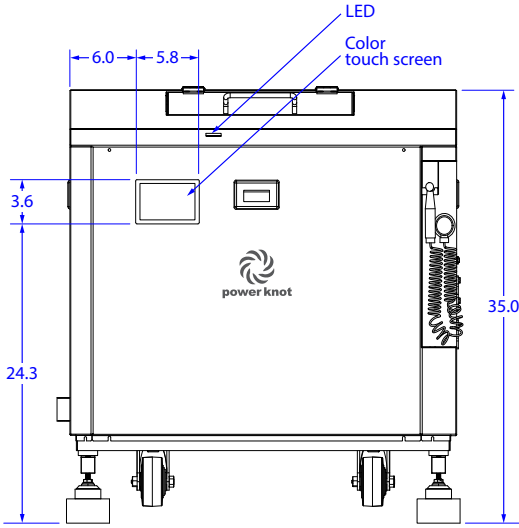

Front

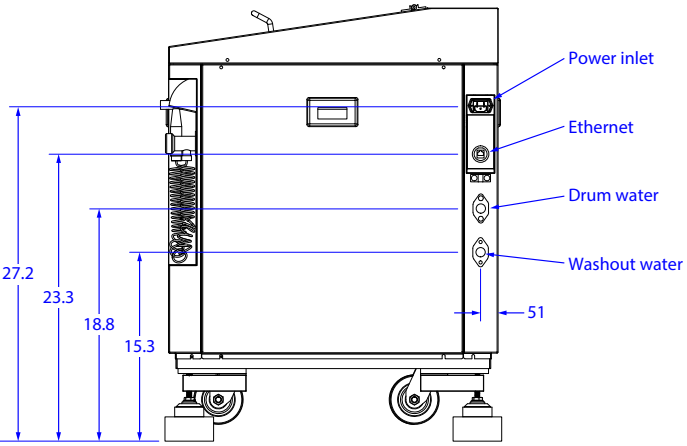

Right

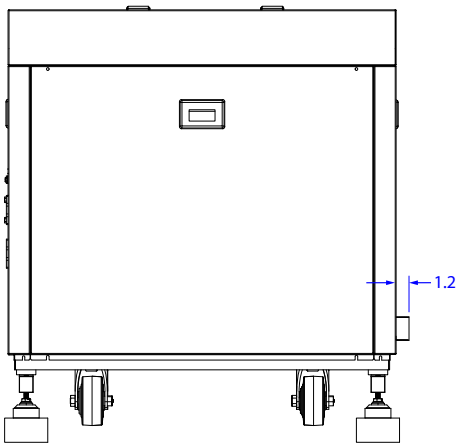

Back

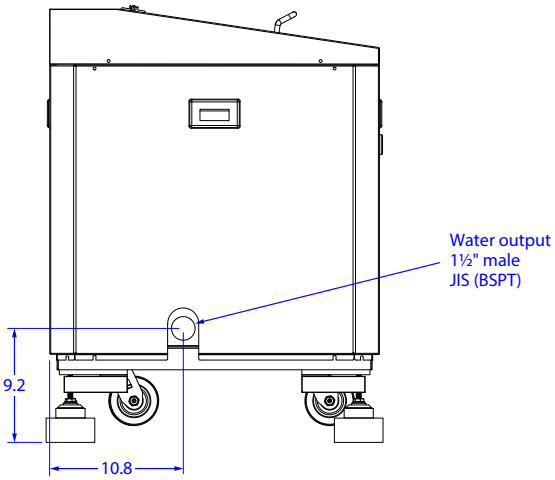

Left

Power Knot LLC | 47613 Warm Springs Blvd | Fremont, CA 94539 USA | +1-408-889-8433 | info@powerknot.com | www.powerknot.com

Power Knot, the Power Knot logo, the Power Knot mark, LFC, and LFC Cloud are trademarks or registered trademarks of Power Knot LLC. All other trademarks used herein are the property of their respective owners. Copyright © 2009–2024 Power Knot LLC; all rights are reserved. Specifications are subject to change at any time without notice. Document number 96-01034-39, 05 May 2024.