Infusion Series ICB Coffee Brewer

Infusion Series ICB-DV
Dimensions: 10.0" x 26.8" x 22.0"
(25.4 cm x 68.1 cm x 55.9 cm)

Features

Infusion Series ICB Brewer

- Sleek, modernized design language on the brewer and servers
- Rounded angles on the corners and trunk
- Digital readout displays in English, Spanish, or French ---for easier programming and control--- and can show either 'Standard' or Metric measurements. Digital readout also shows machine status, and targeted advertising messages can be programmed for display.
- Energy-saver mode reduces tank temperature during idle periods
- Electronic funnel lock prevents removal of each brew funnel until drip- through is complete
- Brew counter keeps track of how many batches are brewed
- BUNN Infusion Series technology allows for multiple recipes from one footprint with six brew buttons and three batch sizes
- Pre-infusion and pulse brew for maximum flavor extraction. Cold brew lockout & digital temperature control further ensure top-notch brewing.
- Exclusive Peak Extraction™ Sprayhead is multi-directiona with a 17-hole design to ensure ultimate uniformity of extraction
- USB programming
- Hot water faucet (supplied for custom installation)

Related Products

Easy Clear® EQ-17-TL
Product No. : 30200.1000
Dimensions:
12 7/16" H x 2½" W x 3" D
(31.6 cm H x 6.35 cm W x 7.62 cm D)

Gourmet Filter Pack
Product No. : 20138.1000
Packed per case: 500
Dimensions:
13 3/4 "x 5 1/4"
(34.93cm x 13.34cm)

Easy Clear® ED-17-TL
Product No. : 30201.1001
Dimensions:
8¼" H x 2 5/16" Dia.
(20.95 cm H x 5.87 cm Dia.)

Model	Agency Listing
Infusion ICB-DV	NSF, c UL us

Dimensions & Specifications CANADA

Model	Product #	Volts	Amps	Total Watts	Capacity per hour	Cubic ft³/m³	Weight lbs/kg	Cord Attached
Infusion ICB-DV	53100.6100	120	12	1440	5.1gal/19.4L	3.36/.09	46.8/21.2	Yes
		120/208	12.8	2660	6.4gal/24.5L	3.36/.09	46.8/21.2	Yes
		120/240	14.8	3540	7.4gal/28.3L	3.36/.09	46.8/21.2	Yes

Capacity: Incoming water temp of 60°F (15.5°C)
Electrical: Requires 2-wires plus ground service rated 120/240V, single phase, 60Hz. Brewer is supplied with a cordset and a NEMA 5-15P plug. Receptacle is not included (NEMA 5-15P).
Plumbing: 20-90 psi (138-621 kPa). Supplied with 3/8" male flare fitting.

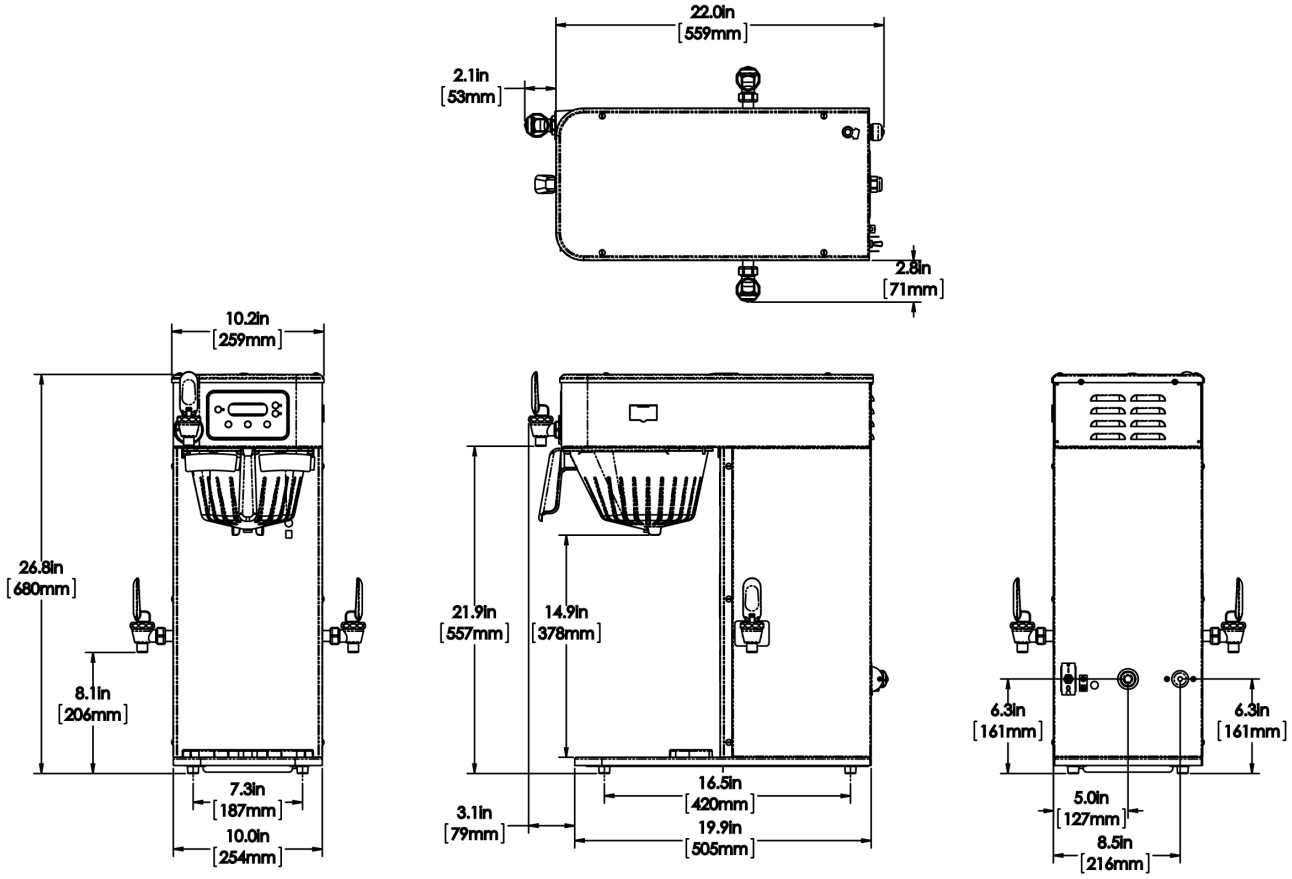

BUNN® practices continuous product research and improvement. We reserve the right to change specifications and product design without notice. Such revisions do not entitle the buyer to corresponding changes, improvements, additions or replacements for previously purchased equipment.
All dimensions shown in centimeters.

1/16 © Bunn-O-Matic Corporation